BE Series Electric Boiler
150# Steam Design
30 kw to 390 kw

EFFECTIVE DATE: 3-1-04
REPLACED DATE: 3-16-82

NOTES:
1. DIMENSIONS ARE SUBJECT TO CHANGE WITHOUT NOTICE. CONSULT FACTORY FOR CERTIFIED DIMENSIONS.
2. TIE IN OF EXPANSION TANK CONNECTION IS ESSENTIAL TO INSURE PROPER OPERATION OF THE LOW WATER CUT-OFF FLOAT
3. NOT INTENDED FOR USE AS A PRINCIPAL HEATING SOURCE FOR LIVING SPACE OF AN INDIVIDUAL RESIDENCE

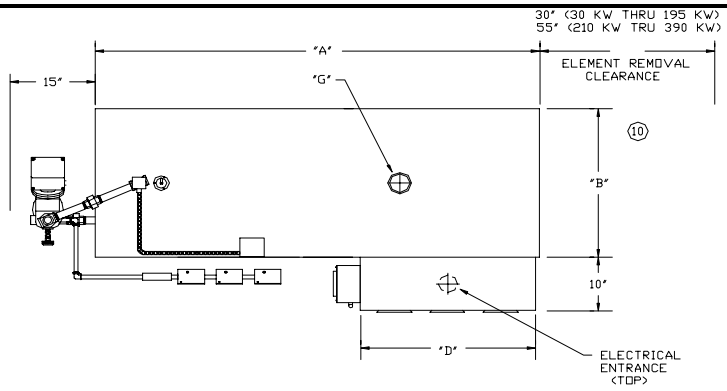

TOP VIEW

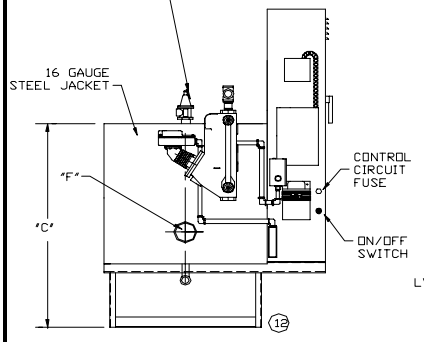

LEFT END VIEW

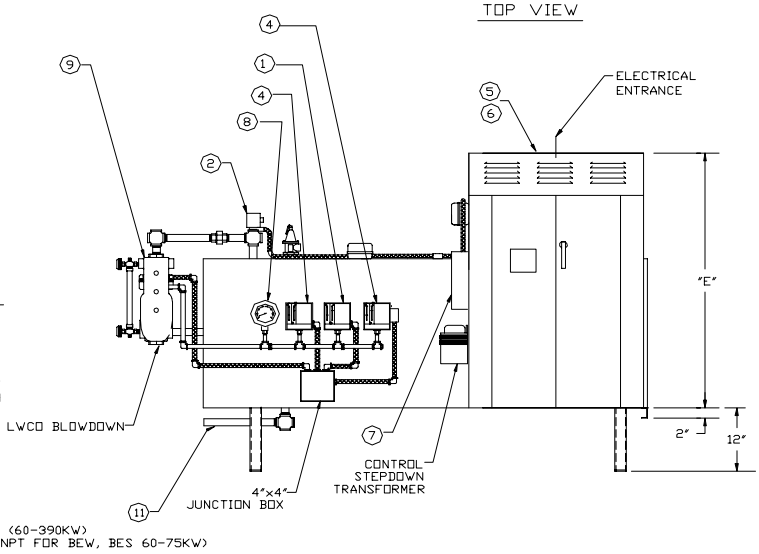

FRONT VIEW

1. OPERATOR	5. POWER PANEL	9. LWCO/PUMP CONTROLLER
2. PROBE TYPE LWCO	6. CONTROL PANEL	10. ELEMENT ACCESS
3. RELIEF VALVE	7. STEP CONTROLLER	11. DRAIN
4. PRESSURETROL	8. PRESSURE GAUGE	12. STRUCTURAL STEEL LEGS

BEQ Series

	Vessel Dimensions			Power Panel Voltage				Inlet	Outlet	Fluid Cap. Oper. Level Gallons		Aprox. Ship WT.
	length	width	height	208-230/3/60		380-460-575/3/60						
KW	A	B	C	D	E	D	E	F	G	Water	Steam	
30	43	20	32	20	24	20	24	1	2	24	13	775
45	43	20	32	20	30	20	24	1	2	24	13	775
60	43	20	32	30	36	20	24	1	2	24	13	775
75	43	20	32	30	36	20	30	1	2	24	13	850
90	43	28	40	30	36	20	30	1	3	52	32	1000
105	43	28	40	30	48	30	36	1	3	52	32	1025
120	43	28	40	30	48	30	36	1	3	52	32	1050
135	43	28	40	30	66	30	36	1	3	52	32	1300
150	43	28	40	30	66	30	36	1	3	52	32	1325
165	43	28	40	30	66	30	36	1	3	52	32	1350
180	43	28	40	30	66	30	36	1	3	52	32	1400
195	43	28	40	30	66	30	48	1	3	52	32	1450
210	76	28	40	N/A	N/A	30	48	1	3	105	69	1950
240	76	28	40	N/A	N/A	30	48	1	3	105	69	2000
270	76	28	40	N/A	N/A	30	66	1	3	105	69	2450
300	76	28	40	N/A	N/A	30	66	1	3	105	69	2500
330	76	28	40	N/A	N/A	30	66	1	3	105	69	2550
360	76	28	40	N/A	N/A	30	66	1	3	105	69	2600
390	76	28	40	N/A	N/A	30	66	1	3	105	69	2650

BRYAN BOILERS LLC
783 NORTH CHILI AVE
PERU, INDIANA 46970

FORM NO.: 2253